National Semiconductor

February 1993

54AC/74AC86
Quad 2-Input Exclusive-OR Gate

General Description

The 'AC86 contains four, 2-input exclusive-OR gates.

Features

- I_{CC} reduced by 50%
- Outputs source/sink 24 mA
- Standard Military Drawing (SMD)
  — 'AC86: 5962-89550

Logic Symbol

IEEE/IEC

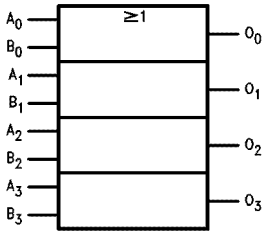

TL/F/9909–3

Connection Diagrams

Pin Assignment for DIP, Flatpak and SOIC

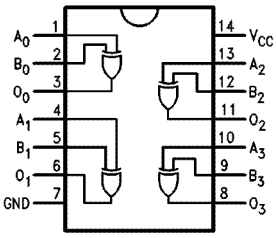

TL/F/9909–2

Pin Assignment for LCC

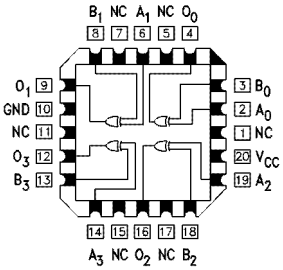

TL/F/9909–1

Pin Names	Description
A_0–A_3	Inputs
B_0–B_3	Inputs
O_0–O_3	Outputs

FACT™ is a trademark of National Semiconductor Corporation.

  RRD-B30M75/Printed in U. S. A.

Absolute Maximum Ratings (Note 1)

If Military/Aerospace specified devices are required, please contact the National Semiconductor Sales Office/Distributors for availability and specifications.

Supply Voltage (V_{CC})	−0.5V to +7.0V
DC Input Diode Current (I_{IK})	
V_I = 0.5V	−20 mA
V_I = V_{CC} +0.5V	+20 mA
DC Input Voltage (V_I)	−0.5V to V_{CC} +0.5V
DC Output Diode Current (I_{OK})	
V_O = −0.5V	−20 mA
V_O = V_{CC} +0.5V	+20 mA
DC Output Voltage (V_O)	−0.5V to V_{CC} +0.5V
DC Output Source or Sink Current (I_O)	±50 mA
DC V_{CC} or Ground Current Per Output Pin (I_{CC} or I_{GND})	±50 mA
Storage Temperature (T_{STG})	−65°C to +150°C
Junction Temperature (T_J)	
CDIP	175°C
PDIP	140°C

Note 1: Absolute maximum ratings are those values beyond which damage to the device may occur. The databook specifications should be met, without exception, to ensure that the system design is reliable over its power supply, temperature, and output/input loading variables. National does not recommend operation of FACT™ circuits outside databook specifications.

Recommended Operating Conditions

Supply Voltage (V_{CC})	
'AC	2.0V to 6.0V
Input Voltage (V_I)	0V to V_{CC}
Output Voltage (V_O)	0V to V_{CC}
Operating Temperature (T_A)	
74AC	−40°C to +85°C
54AC	−55°C to +125°C
Minimum Input Edge Rate (ΔV/Δt) 'AC Devices V_{IN} from 30% to 70% of V_{CC} V_{CC} @ 3.3V, 4.5V, 5.5V	125 mV/ns

DC Characteristics for 'AC Family Devices

Symbol	Parameter	V_{CC} (V)	74AC T_A = 25°C Typ	74AC T_A = 25°C Guaranteed Limits	54AC T_A = −55°C to +125°C Guaranteed Limits	74AC T_A = −40°C to +85°C Guaranteed Limits	Units	Conditions
V_{IH}	Minimum High Level Input Voltage	3.0	1.5	2.1	2.1	2.1	V	V_{OUT} = 0.1V or V_{CC} − 0.1V
		4.5	2.25	3.15	3.15	3.15		
		5.5	2.75	3.85	3.85	3.85		
V_{IL}	Maximum Low Level Input Voltage	3.0	1.5	0.9	0.9	0.9	V	V_{OUT} = 0.1V or V_{CC} − 0.1V
		4.5	2.25	1.35	1.35	1.35		
		5.5	2.75	1.65	1.65	1.65		
V_{OH}	Minimum High Level Output Voltage	3.0	2.99	2.9	2.9	2.9	V	I_{OUT} = −50 μA
		4.5	4.49	4.4	4.4	4.4		
		5.5	5.49	5.4	5.4	5.4		
		3.0		2.56	2.4	2.46	V	*V_{IN} = V_{IL} or V_{IH} I_{OH} −12 mA
		4.5		3.86	3.7	3.76		−24 mA
		5.5		4.86	4.7	4.76		−24 mA
V_{OL}	Maximum Low Level Output Voltage	3.0	0.002	0.1	0.1	0.1	V	I_{OUT} = 50 μA
		4.5	0.001	0.1	0.1	0.1		
		5.5	0.001	0.1	0.1	0.1		
		3.0		0.36	0.50	0.44	V	*V_{IN} = V_{IL} or V_{IH} I_{OL} 12 mA
		4.5		0.36	0.50	0.44		24 mA
		5.5		0.36	0.50	0.44		24 mA

*All outputs loaded; thresholds on input associated with output under test.

DC Characteristics for ’AC Family Devices (Continued)

Symbol	Parameter	V_{CC} (V)	74AC $T_A = 25°C$ Typ	74AC $T_A = 25°C$ Guaranteed Limits	54AC $T_A = -55°C$ to $+125°C$ Guaranteed Limits	74AC $T_A = -40°C$ to $+85°C$ Guaranteed Limits	Units	Conditions
I_{IN}	Maximum Input Leakage Current	5.5		±0.1	±1.0	±1.0	μA	$V_I = V_{CC}$, GND
I_{OZ}	Maximum TRI-STATE®							V_I (OE) = V_{IL}, V_{IH} $V_O = V_{CC}$, GND
I_{OLD}	†Minimum Dynamic Output Current	5.5			50	75	mA	V_{OLD} = 1.65V Max
I_{OHD}		5.5			−50	−75	mA	V_{OHD} = 3.85V Min
I_{CC}	Maximum Quiescent Supply Current	5.5		2.0	40.0	20.0	μA	$V_{IN} = V_{CC}$ or GND

†Maximum test duration 20 ms, one output loaded at a time.

Note: I_{IN} and I_{CC} @ 3.0V are guaranteed to be less than or equal to the respective limit @ 5.5V V_{CC}.
I_{CC} for 54AC @ 25°C is identical to 74AC @ 25°C.

AC Electrical Characteristics

Symbol	Parameter	V_{CC}* (V)	74AC $T_A = +25°C$ $C_L = 50$ pF Min	74AC Typ	74AC Max	54AC $T_A = -55°C$ to $+125°C$ $C_L = 50$ pF Min	54AC Max	74AC $T_A = -40°C$ to $+85°C$ $C_L = 50$ pF Min	74AC Max	Units
t_{PHL}	Propagation Delay Inputs to Outputs	3.3	2.0	6.0	11.5	1.0	14.0	1.5	12.5	ns
		5.0	1.5	4.5	8.5	1.0	10.0	1.0	9.5	
t_{PLH}	Propagation Delay Inputs to Outputs	3.3	2.0	6.5	11.5	1.0	14.0	1.5	12.5	ns
		5.0	1.5	4.5	8.5	1.0	10.0	1.0	9.0	

*Voltage Range 3.3V is 3.3V ±0.3V
Voltage Range 5.0V is 5.0V ±0.5V

Capacitance

Symbol	Parameter	Typ	Units	Conditions
C_{IN}	Input Capacitance	4.5	pF	V_{CC} = Open
C_{PD}	Power Dissipation Capacitance	35	pF	V_{CC} = 5.0V

Ordering Information

The device number is used to form part of a simplified purchasing code where the package type and temperature range are defined as follows:

74AC 86 P C QR

Temperature Range Family
- 74AC = Commercial
- 54AC = Military

Device Type

Package Code
- P = Plastic DIP
- D = Ceramic DIP
- F = Flatpak
- L = Leadless Ceramic Chip Carrier (LCC)
- S = Small Outline (SOIC)

Temperature Range
- C = Commercial (−40°C to +85°C)
- M = Military (−55°C to +125°C)

Special Variations
- X = Devices shipped in 13″ reels
- QR = Commercial grade device with burn-in
- QB = Military grade device with environmental and burn-in processing shipped in tubes

Physical Dimensions inches (millimeters)

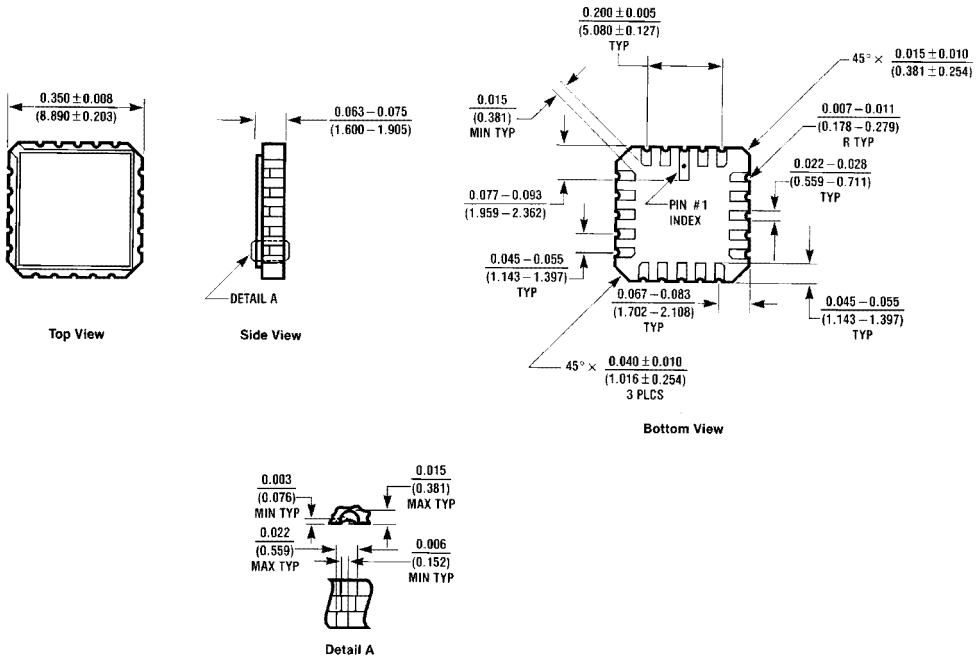

20-Terminal Ceramic Leadless Chip Carrier (L)
NS Package Number E20A

Physical Dimensions inches (millimeters) (Continued)

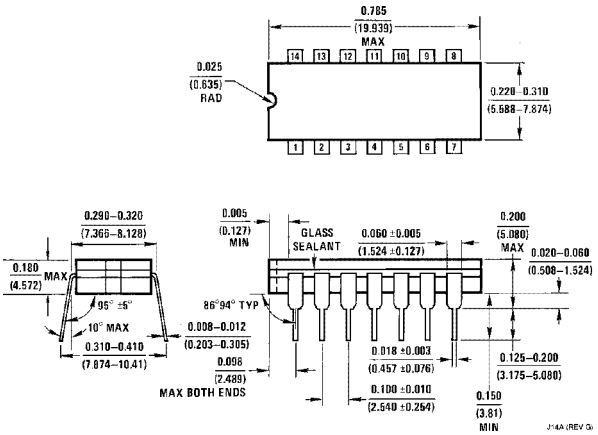

14 Lead Ceramic Dual-In-Line Package (D)
NS Package Number J14A

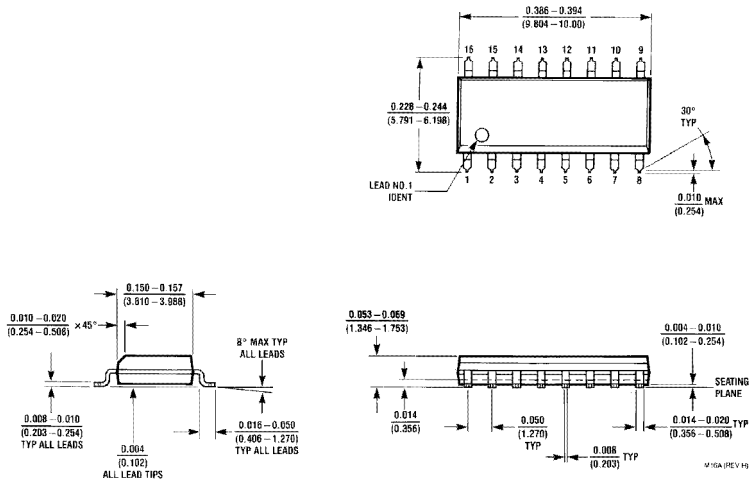

14 Lead Small Outline Integrated Circuit (S)
NS Package Number M16A

Physical Dimensions inches (millimeters) (Continued)

Lit. # 114678

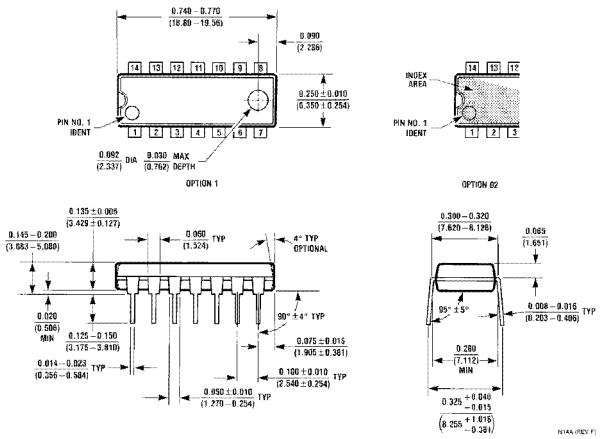

14 Lead Plastic Dual-In-Line Package (P)
NS Package Number N14A

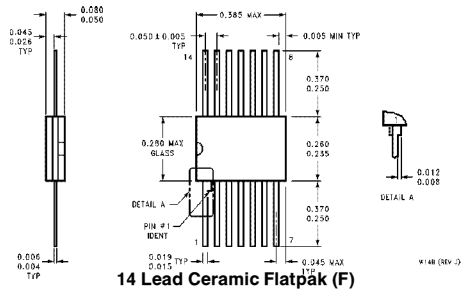

14 Lead Ceramic Flatpak (F)
NS Package Number W14B

LIFE SUPPORT POLICY

NATIONAL'S PRODUCTS ARE NOT AUTHORIZED FOR USE AS CRITICAL COMPONENTS IN LIFE SUPPORT DEVICES OR SYSTEMS WITHOUT THE EXPRESS WRITTEN APPROVAL OF THE PRESIDENT OF NATIONAL SEMICONDUCTOR CORPORATION. As used herein:

1. Life support devices or systems are devices or systems which, (a) are intended for surgical implant into the body, or (b) support or sustain life, and whose failure to perform, when properly used in accordance with instructions for use provided in the labeling, can be reasonably expected to result in a significant injury to the user.
2. A critical component is any component of a life support device or system whose failure to perform can be reasonably expected to cause the failure of the life support device or system, or to affect its safety or effectiveness.

National Semiconductor Corporation
2900 Semiconductor Drive
P.O. Box 58090
Santa Clara, CA 95052-8090
Tel: 1(800) 272-9959
TWX: (910) 339-9240

National Semiconductor GmbH
Livry-Gargan-Str. 10
D-82256 Fürstenfeldbruck
Germany
Tel: (81-41) 35-0
Telex: 527649
Fax: (81-41) 35-1

National Semiconductor Japan Ltd.
Sumitomo Chemical
Engineering Center
Bldg. 7F
1-7-1, Nakase, Mihama-Ku
Chiba-City,
Ciba Prefecture 261
Tel: (043) 299-2300
Fax: (043) 299-2500

National Semiconductor Hong Kong Ltd.
13th Floor, Straight Block,
Ocean Centre, 5 Canton Rd.
Tsimshatsui, Kowloon
Hong Kong
Tel: (852) 2737-1600
Fax: (852) 2736-9960

National Semiconductores Do Brazil Ltda.
Rue Deputado Lacorda Franco
120-3A
Sao Paulo-SP
Brazil 05418-000
Tel: (55-11) 212-5066
Telex: 391-1131931 NSBR BR
Fax: (55-11) 212-1181

National Semiconductor (Australia) Pty, Ltd.
Building 16
Business Park Drive
Monash Business Park
Nottinghill, Melbourne
Victoria 3168 Australia
Tel: (3) 558-9999
Fax: (3) 558-9998